OTL 29200525	REVISIONS		
LTR	DESCRIPTION	DATE	APPROVED
–	ECN 11629, RELEASE	9/26/02	RA 9/26/02
A	ECN 16564, ADD LID THICKNESS	10/19/09	

NOTES:
1. HATCHED AREAS DENOTE METALLIZATION

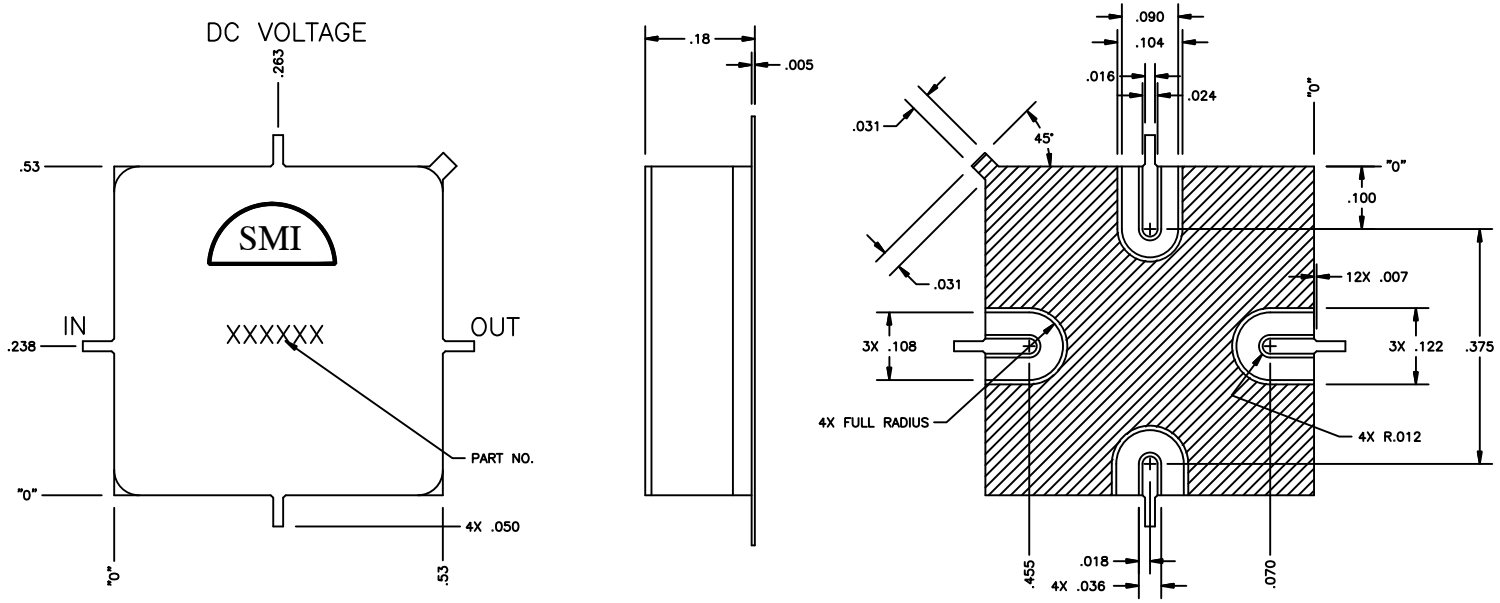

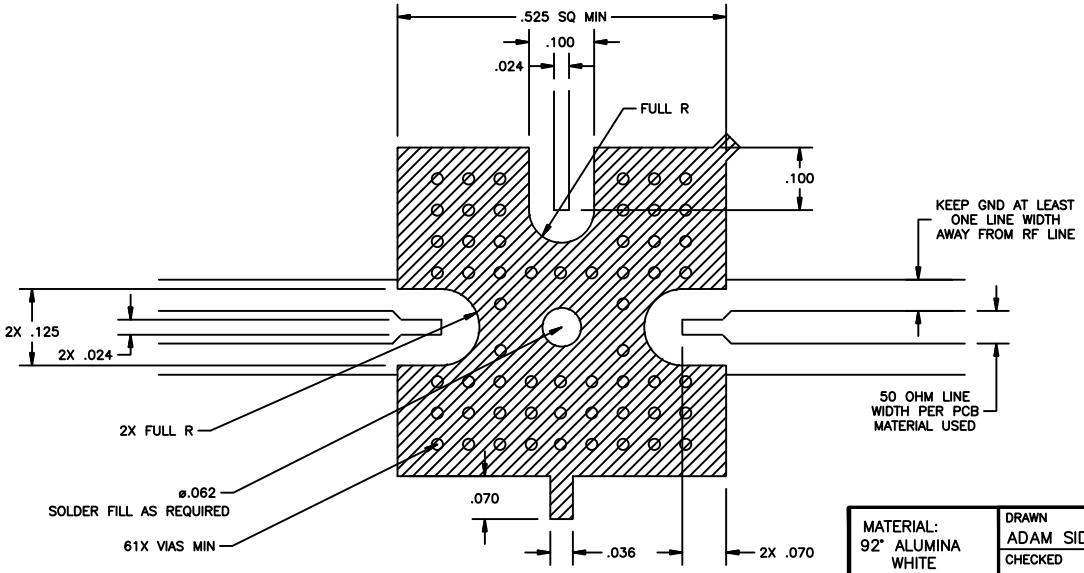

RECOMMENDED FOOT PRINT

MATERIAL: 92° ALUMINA WHITE	DRAWN ADAM SIDLE	DATE 9/26/02	SPECTRUM MICROWAVE A Spectrum Control Business — PHILADELPHIA OPERATIONS, 2707 BLACK LAKE PLACE, PHILADELPHIA PA. 19154 (USA)
FINISH: NOTED	CHECKED	DATE	
	ENGINEERING AAR	DATE 9/26/02	OUTLINE SM–19 HEADER .525 SQ
DIMENSIONS: INCHES Y14.5M–1994	MANUFACTURING	DATE	
TOLERANCE: DEC. .XX +/– .01; .XXX +/– .005; ANG .X 1° DEG	QUALITY RA	DATE 9/26/02	CODE IDENT NO. 60979 — OTL 29200525
			PDM VAULT:PHIL\ENG\ACLTW\OUTLINE — SHEET 1 OF 1